Dim-activated LEDs
...in flowers! ...on a hat!

W. Michelle Harris - April 18, 2014

Arduino Homago Geekouts With Howard Rheingold

https://beta.homago.com/arduino/geekout/144/buildalong-wearable-leds-with-light-sensors

Rochester Institute of Technology
Interactive Games & Media, MAGIC Center
http://people.rit.edu/wmhics

Parts

		Jameco.com part	Adafruit.com part
unicolor LEDs difused or wide angle	8 to 16	2133659	778
dome phototransistor, ps5022	1	2099403	
potentiometer (trimmer) 5K ohm (10K works)	1	43078	356
NPN2222A transistor (other NPNs work)	1	178512	756
spdt slide or toggle switch	1	2182442	805
small perf protoboard	1	105100	589
small solderless breadboard	1	20601	64
9V battery snap	1	216452	
9V battery			
hookup wire (22 to 24 AWG)			
stranded wire (24 to 30AWG) for LED flower connections			
silk flowers or ??? with small, easily removed centers			
dark electrical tape			
large craft embroidery needle for poking			
hot glue equipment			
soldering equipment			

Prelude: transistors, generally

- electricity-controlled switches/valves
- Can turn on/off strong currents by sending a weak one to its base

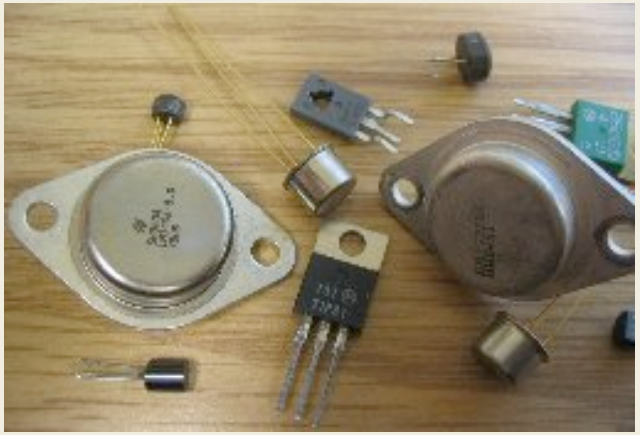

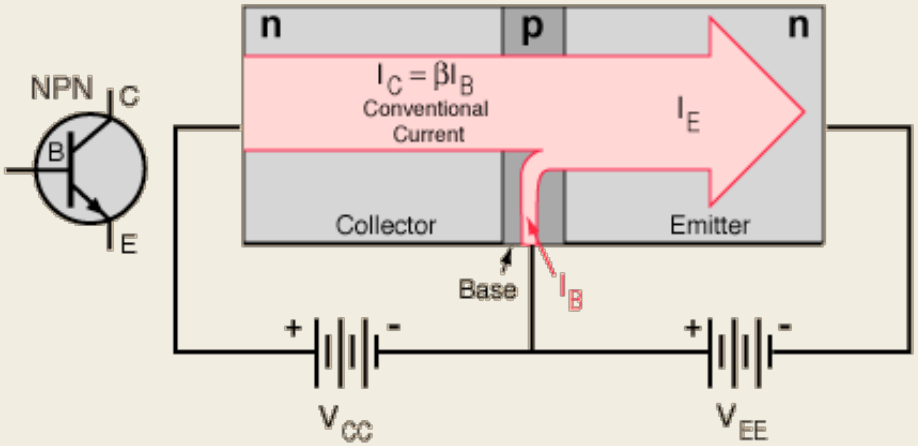

Bipolar NPN transistor

http://hyperphysics.phy-astr.gsu.edu/hbase/solids/trans.html

typical use: NPN switch

http://hyperphysics.phy-astr.gsu.edu/hbase/electronic/transwitch.html

Initially no current to the base, so the transistor is in the cut-off condition with no collector current.

Any V_B sufficient to drive the transistor to saturation (open the "valve") will light the bulb.

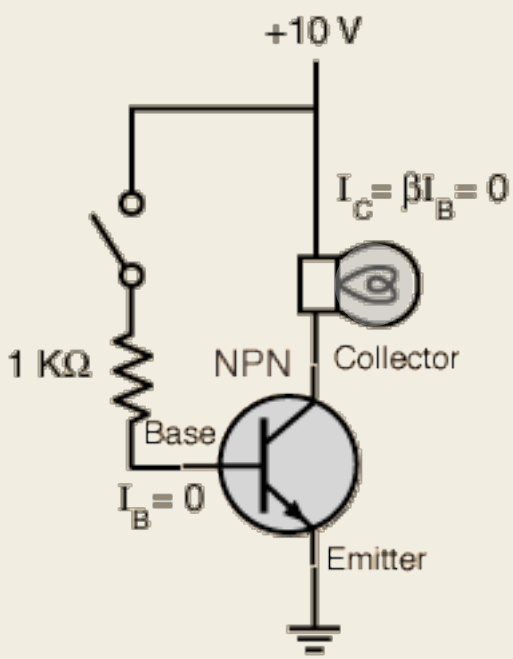

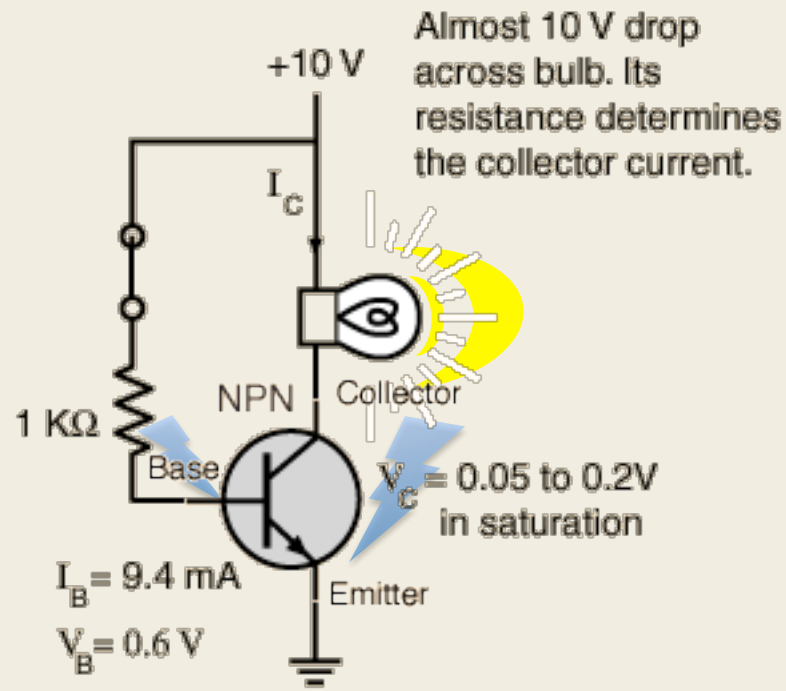

Phototransistors

More light to sensor at base will let [more] electricity through

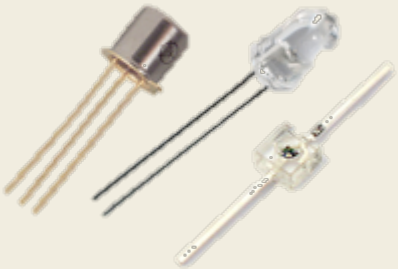

- Tune potentiometer to tune how much light will turn on LEDs

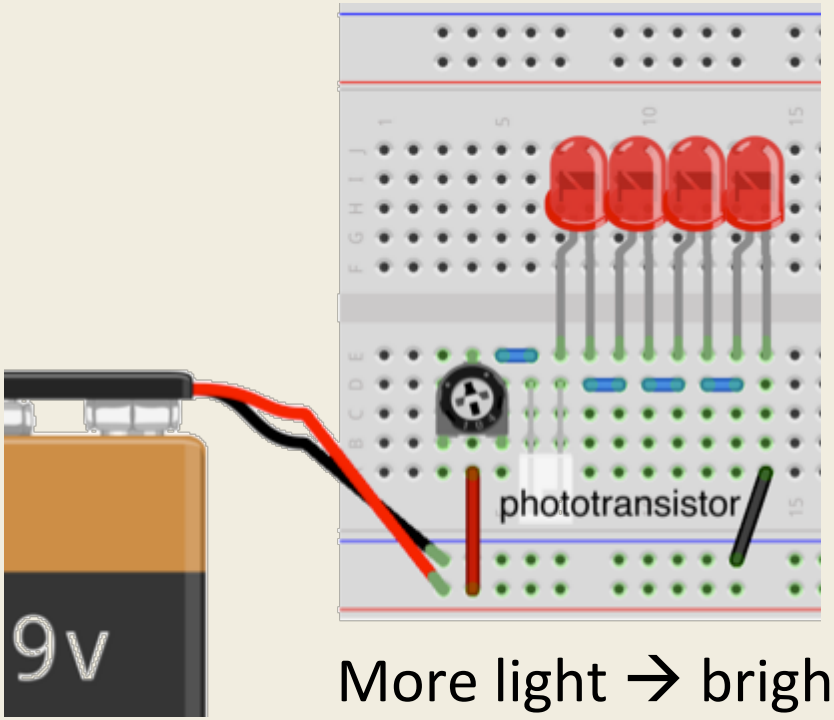

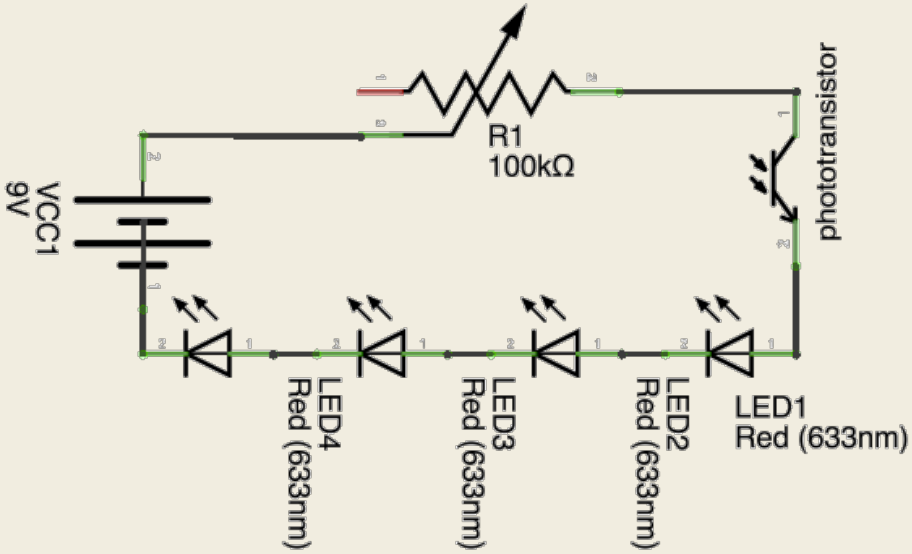

More light → brighter LEDs

fritzing

A Simple and Cheap Dark-Detecting LED Circuit

Posted on **December 12, 2007** by **Windell**

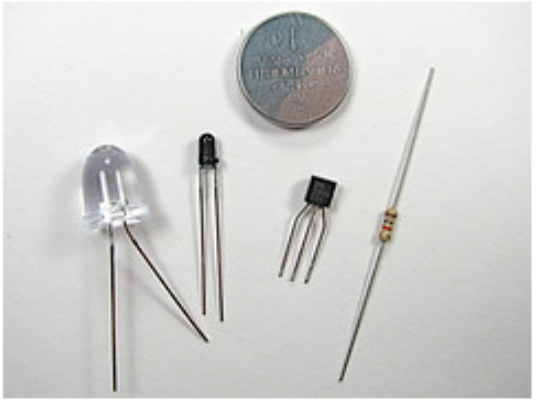

the simplest LED circuit: that of the LED throwie, which has a
3V lithium coin cell. (Funny looking example
add on the phototransistor, which senses the presence of ligh
control the transistor, which turns the LED on.

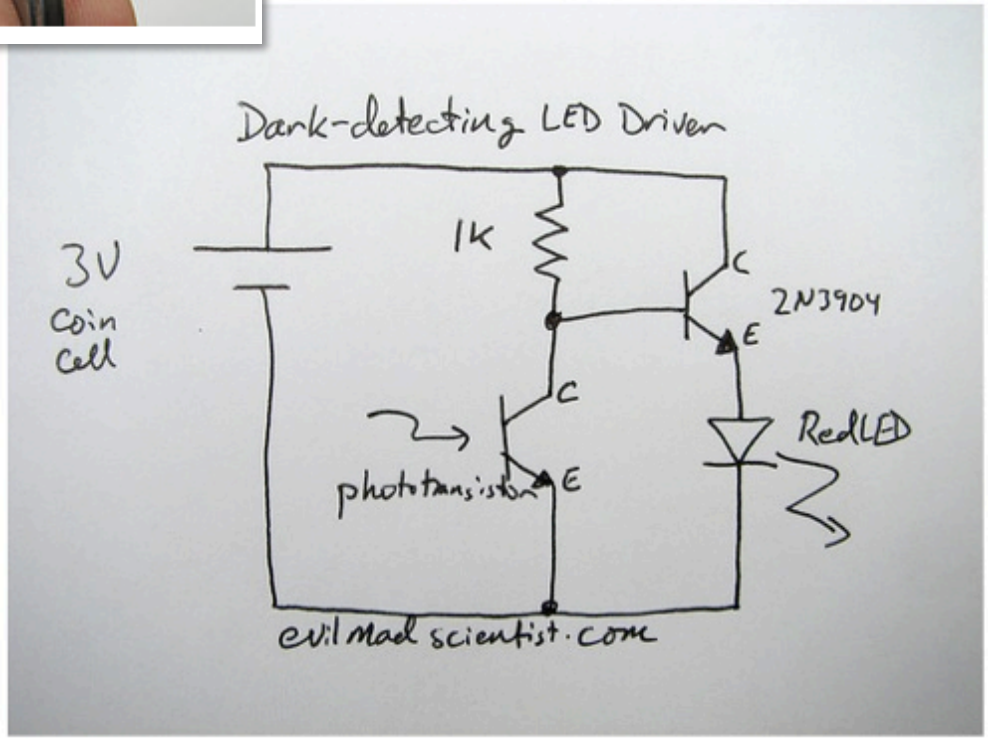

http://www.evilmadscientist.com/2007/a-simple-and-cheap-dark-detecting-led-circuit

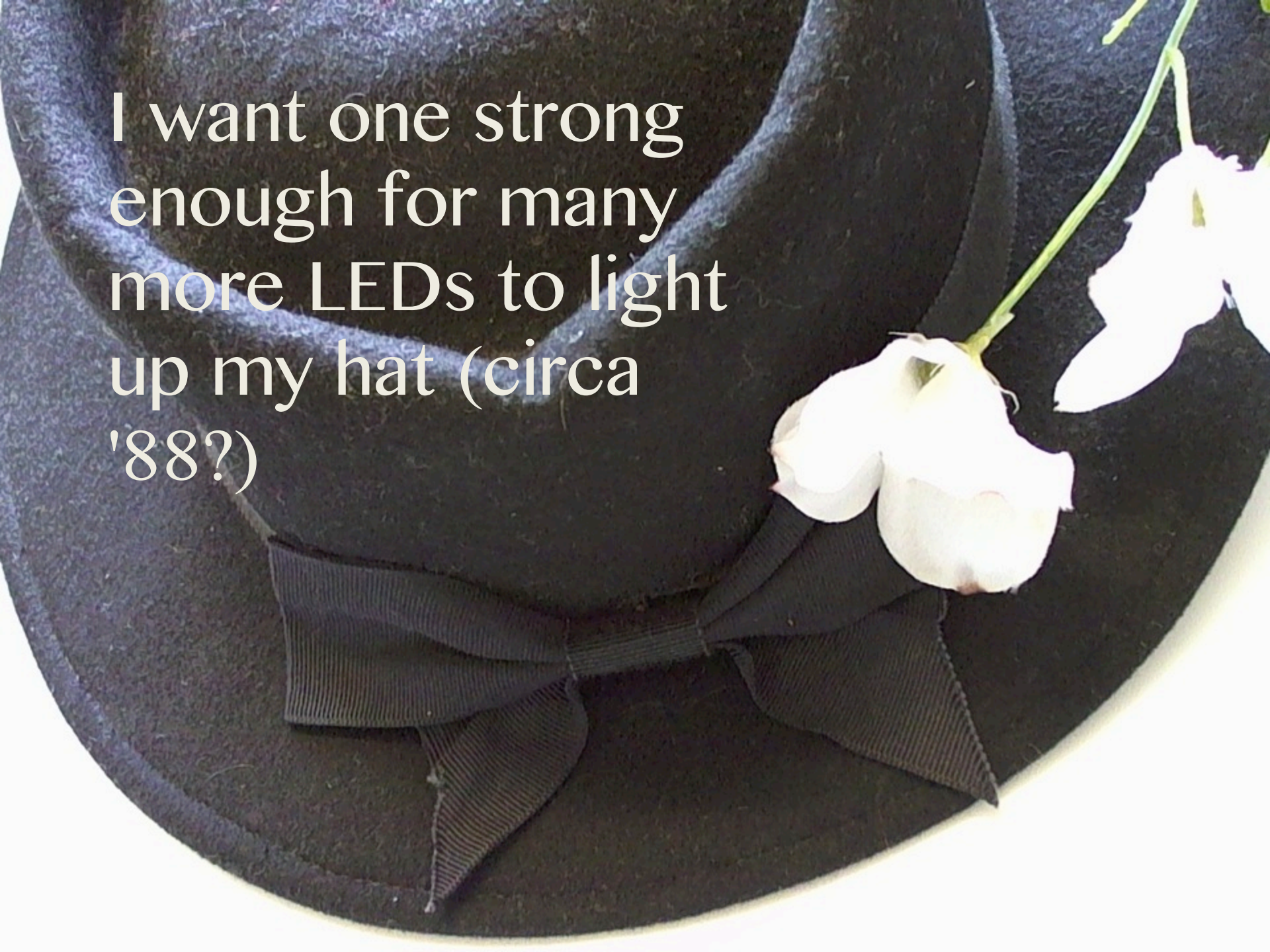
I want one strong enough for many more LEDs to light up my hat (circa '88?)

Materials

- Hat? bag? destination
- silk flowers (3 for me)
- unicolor LEDs, 4 to 16
- dome phototransistor, ps5022
- potentiometer (trimmer) 5K or 10K ohm
- NPN2222A transistor (other NPNs work)
- SPDT slide or toggle switch
- 9V battery snap
- 9V battery

Testing

- small solderless breadboard
- hookup wire (22 to 24 AWG)

Building

- small perf protoboard
- stranded wire (24 to 30AWG)
- floral tape or dark electrical tape
- large craft embroidery needle for poking holes in silk
- soldering equipment
- hot glue equipment

Key Parts

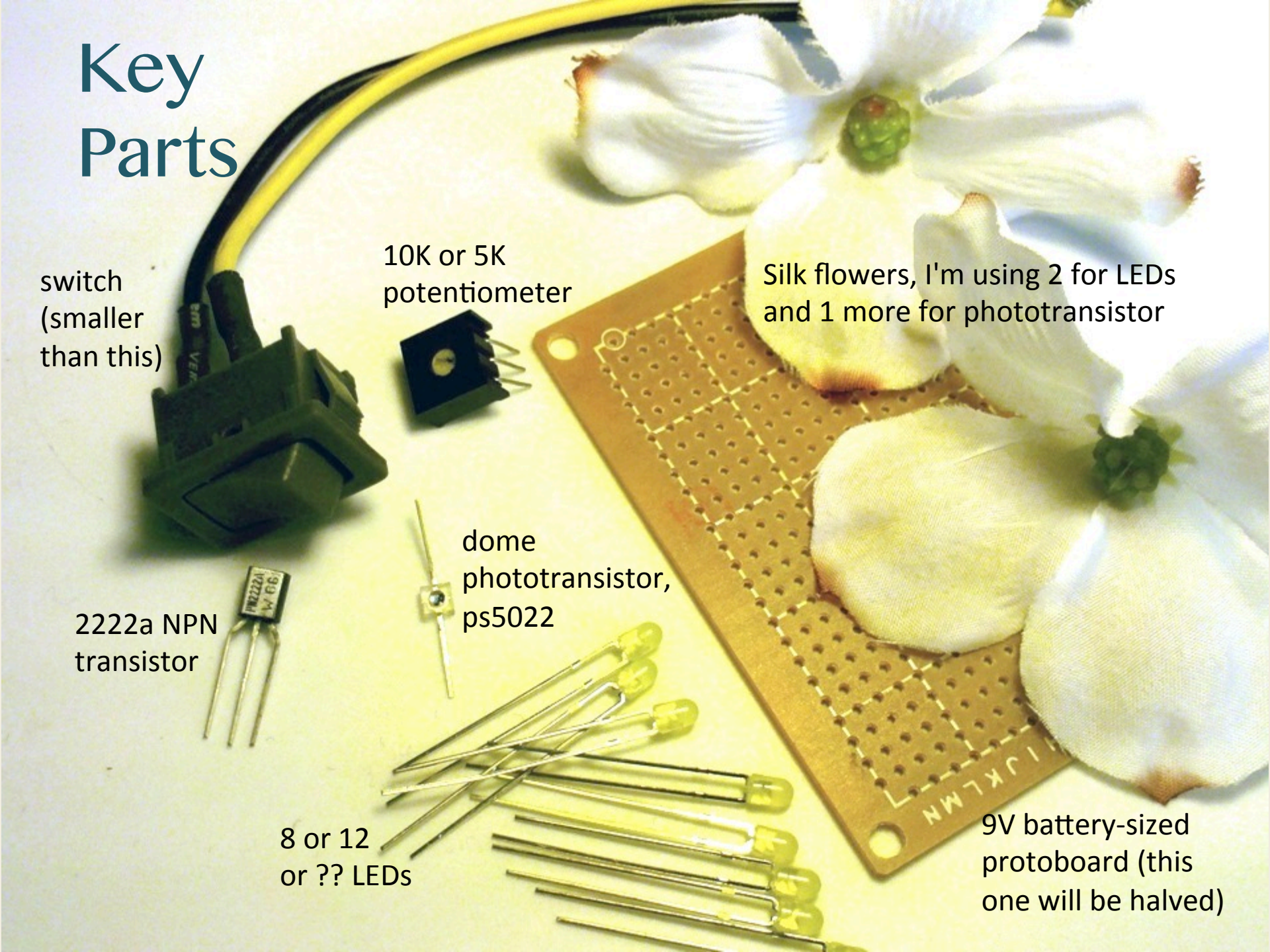
switch (smaller than this)
10K or 5K potentiometer
Silk flowers, I'm using 2 for LEDs and 1 more for phototransistor
dome phototransistor, ps5022
2222a NPN transistor
8 or 12 or ?? LEDs
9V battery-sized protoboard (this one will be halved)

The schematic: Dim-activated LEDs with 9V power

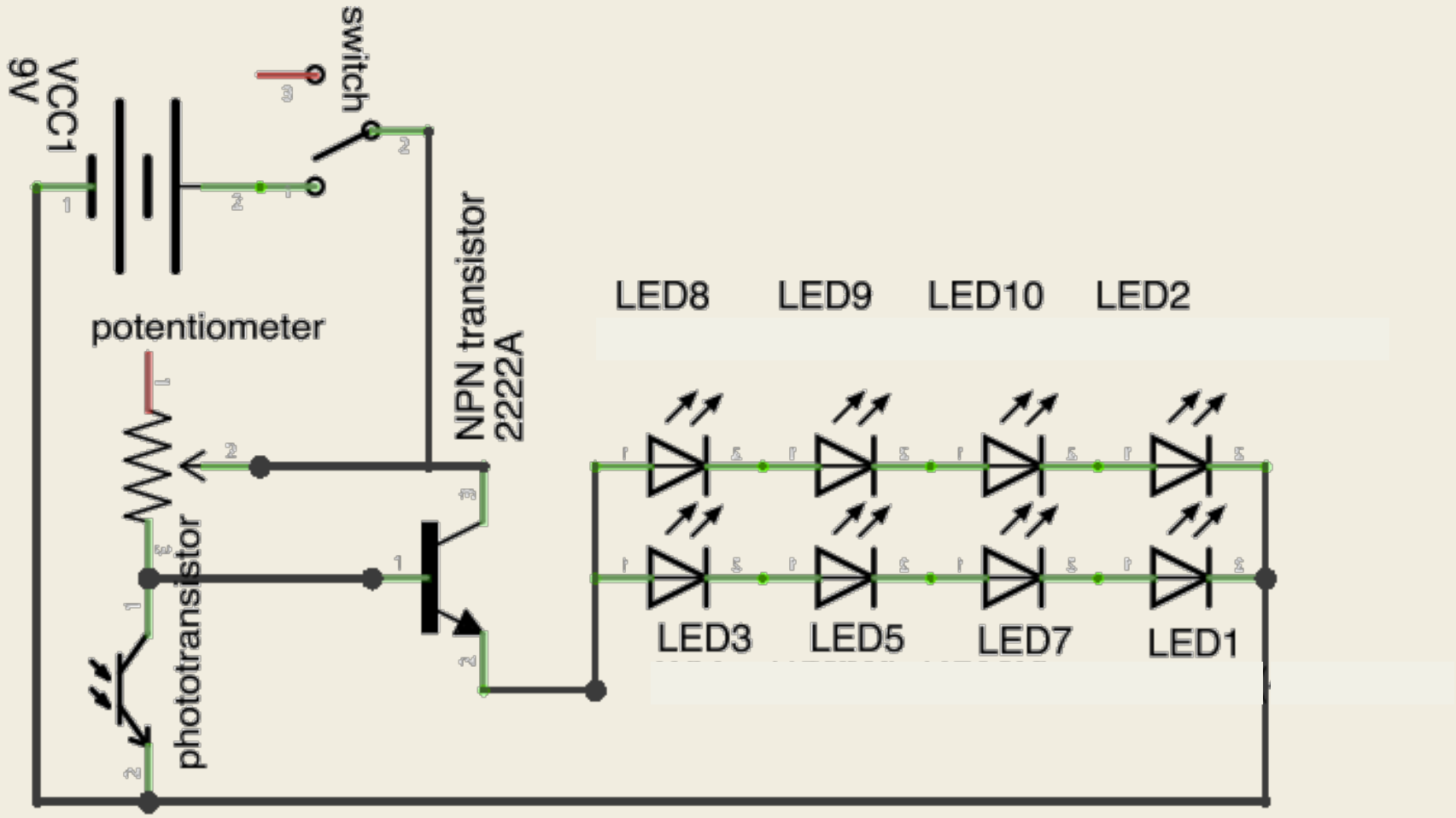

fritzing

Testing our dim-activated LEDs

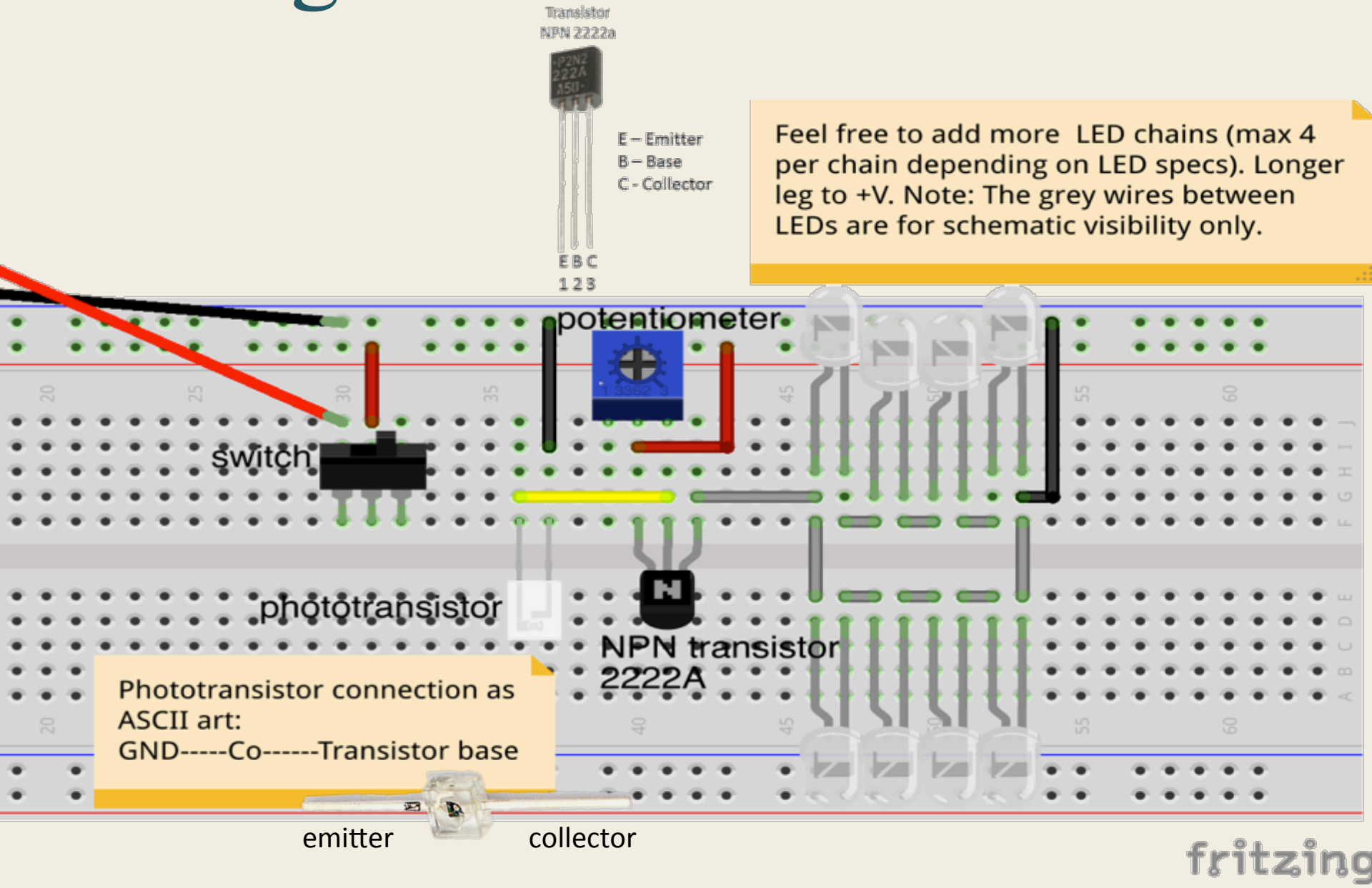

Testing our dim-activated LEDs

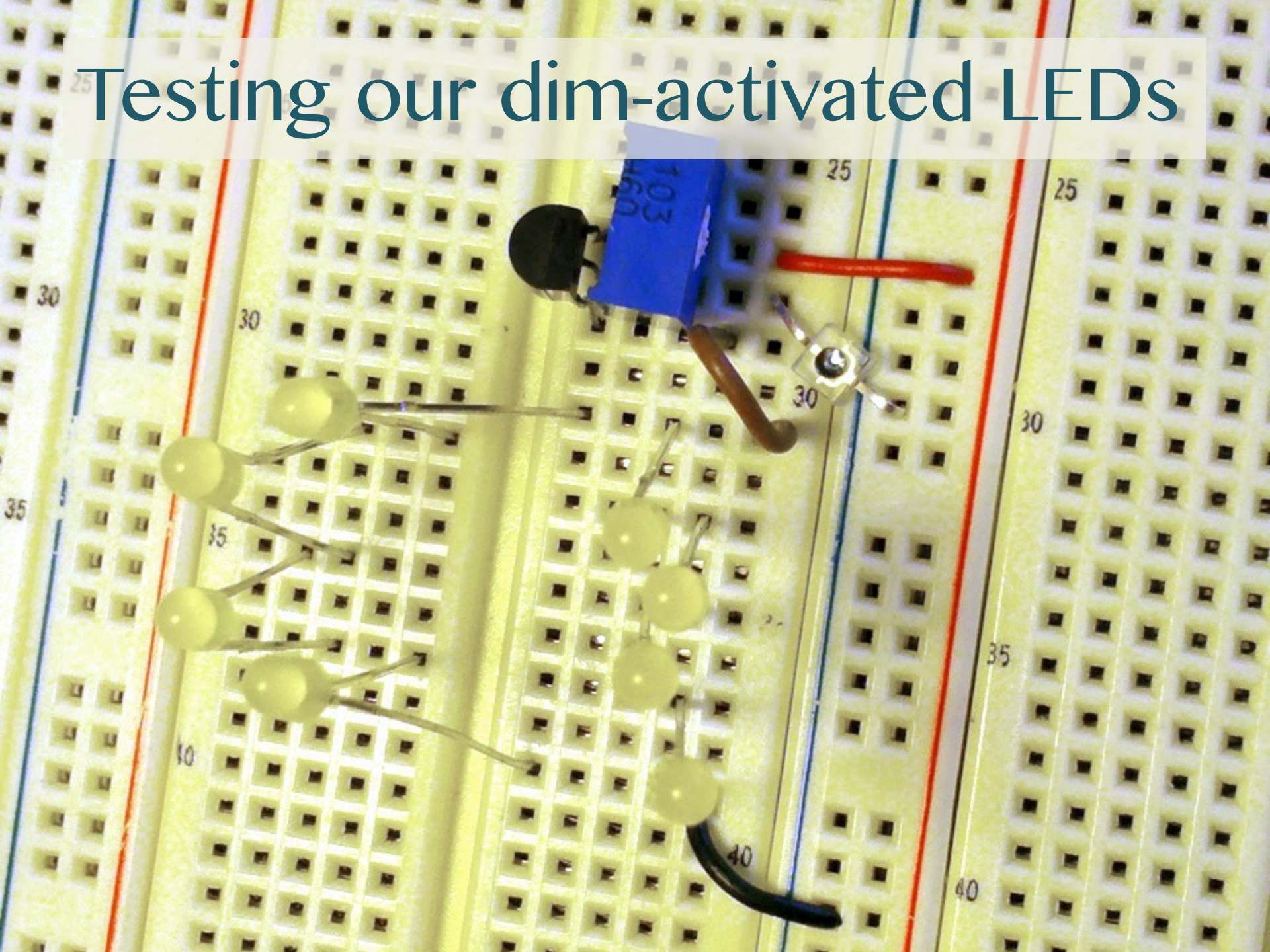

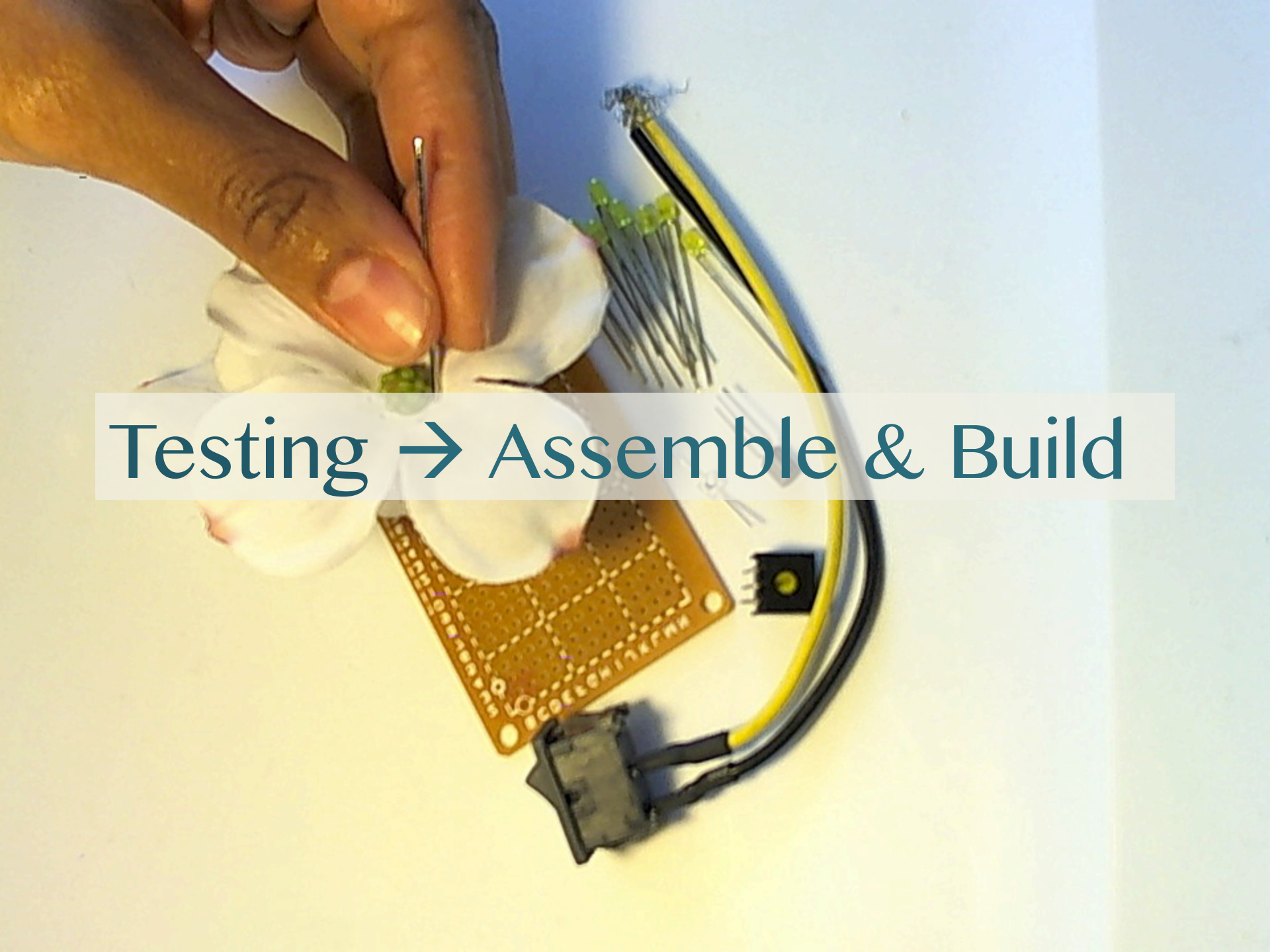

Testing → Assemble & Build

Flowers first!

Use a craft needle to poke holes in silk where you want LED leads to go

(Remove plastic flower centers if necessary)

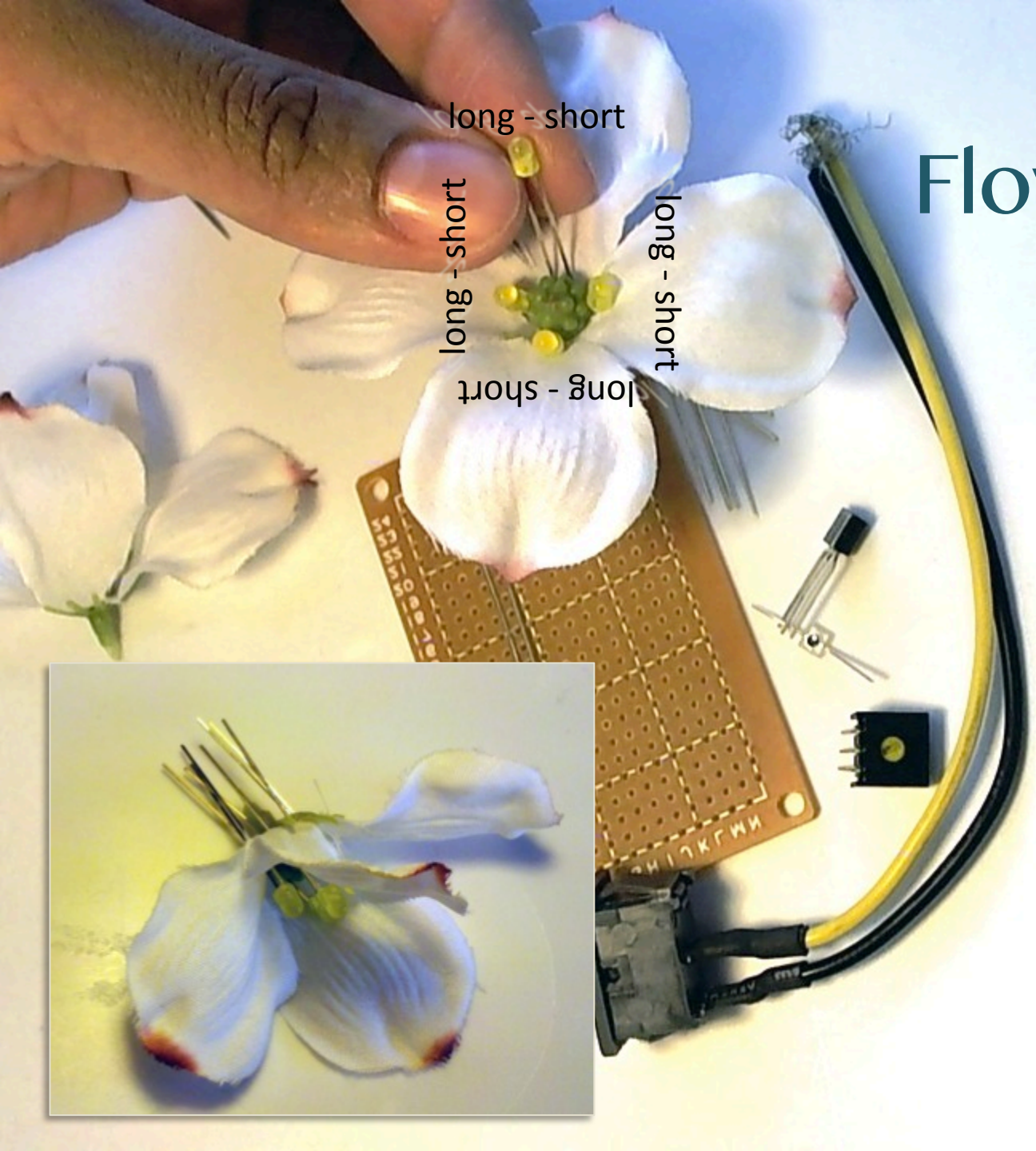

Flowers first!

Insert LEDs, turning each the same way (anode-to-cathode, anode-to-cathode, ...) around the circle.

Alt: one big LED in each middle of several flowers.

Poke one flower with 2 holes and place the phototransistor.

Flowers first!

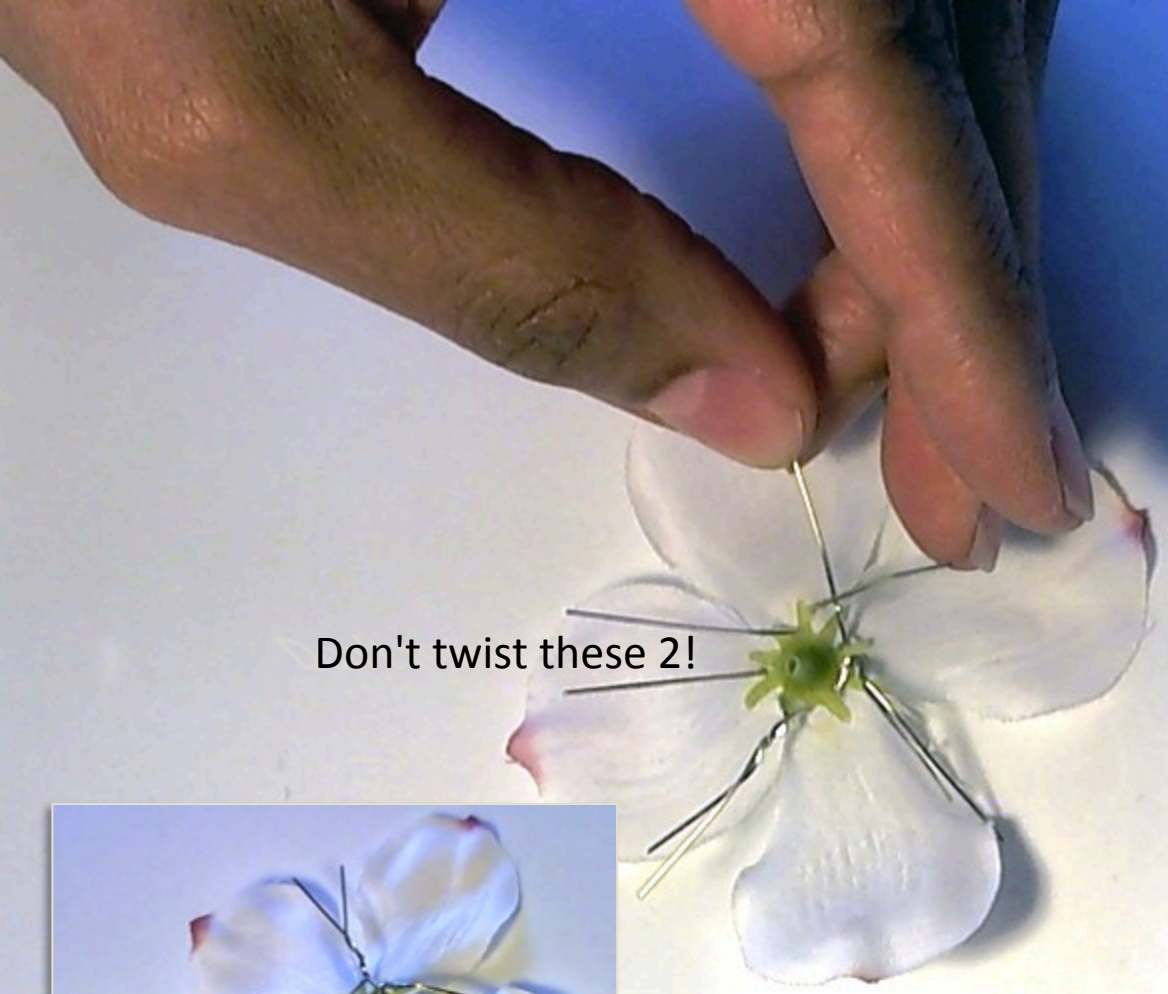

Once the LEDs are in tight, twist LED cathode to next LED's anode (leave first and last leads intact).

Don't twist the phototransistor's leads.

The LED twists will later be soldered & trimmed.

Flowers first!

Test connections so far by connecting battery power/ ground to each LED flower to make sure it lights.

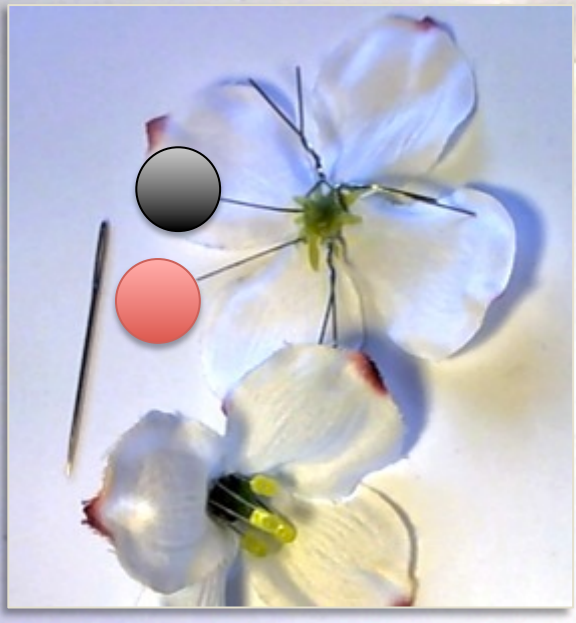

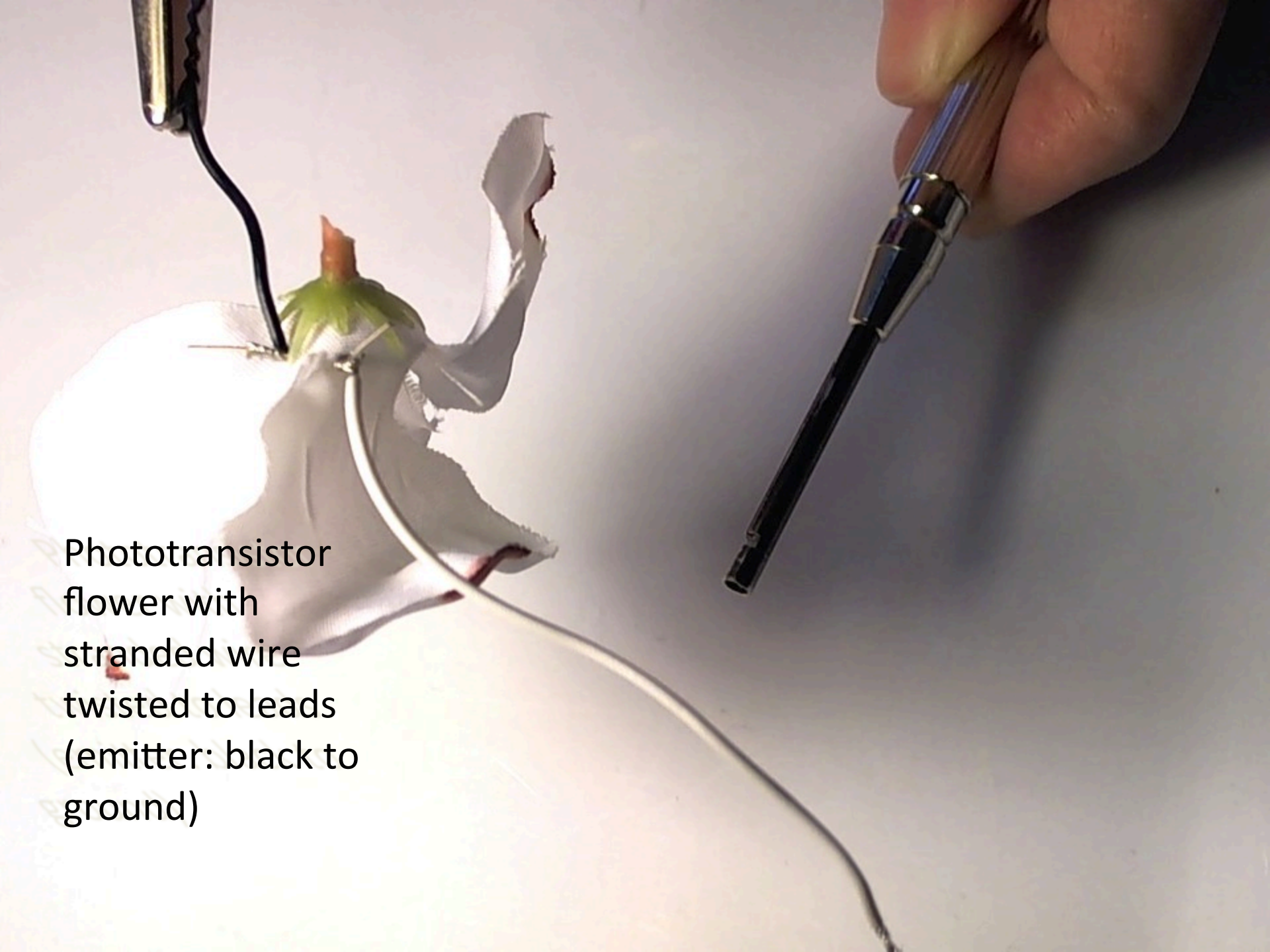

Phototransistor flower with stranded wire twisted to leads (emitter: black to ground)

Flowers first!

Stranded wire will get soldered to the untwisted leads from flowers later.

Phototransistor flower with stranded wire twisted & soldered to leads (emitter: black to ground)

Perfboard: mine is basic & too big

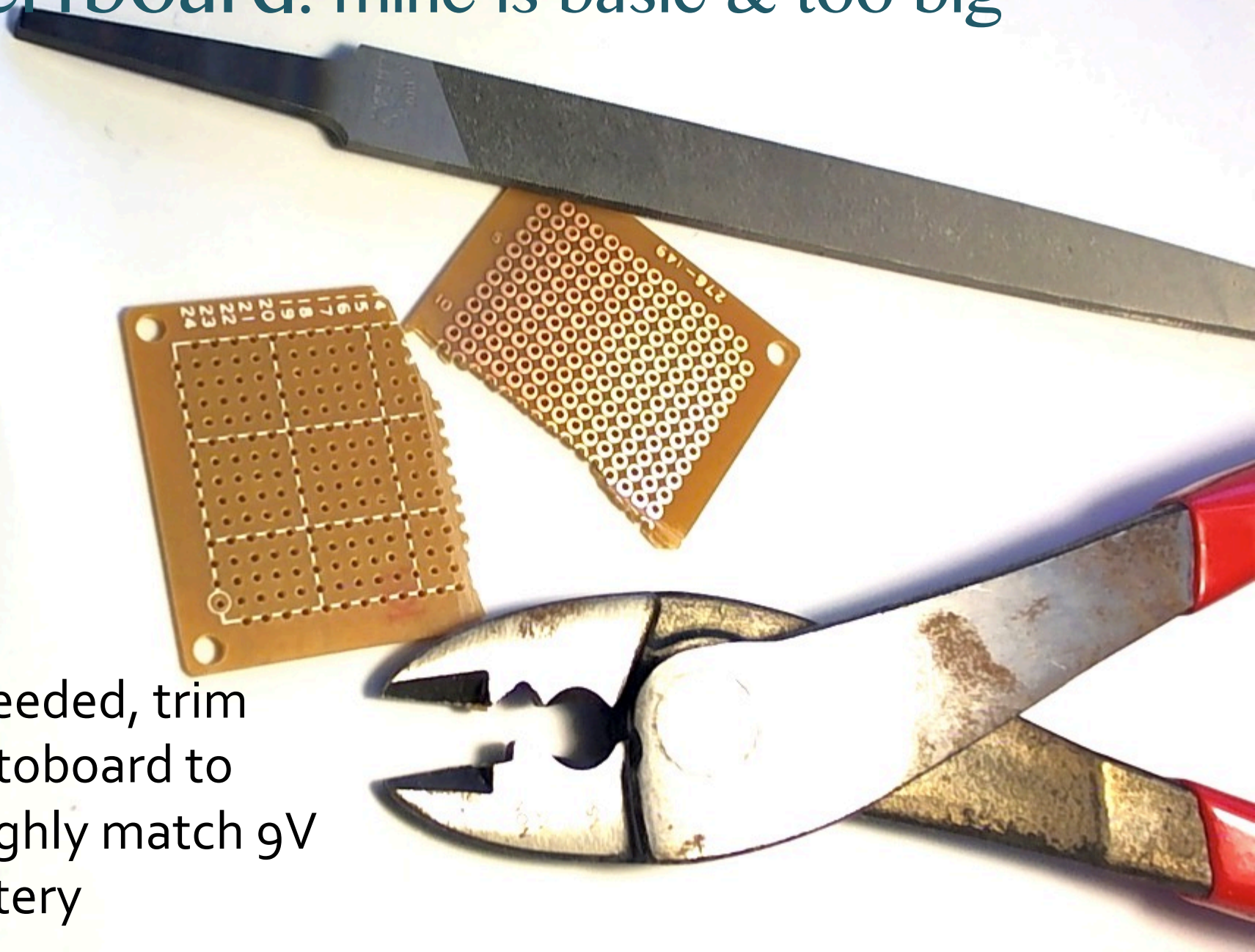

If needed, trim protoboard to roughly match 9V battery

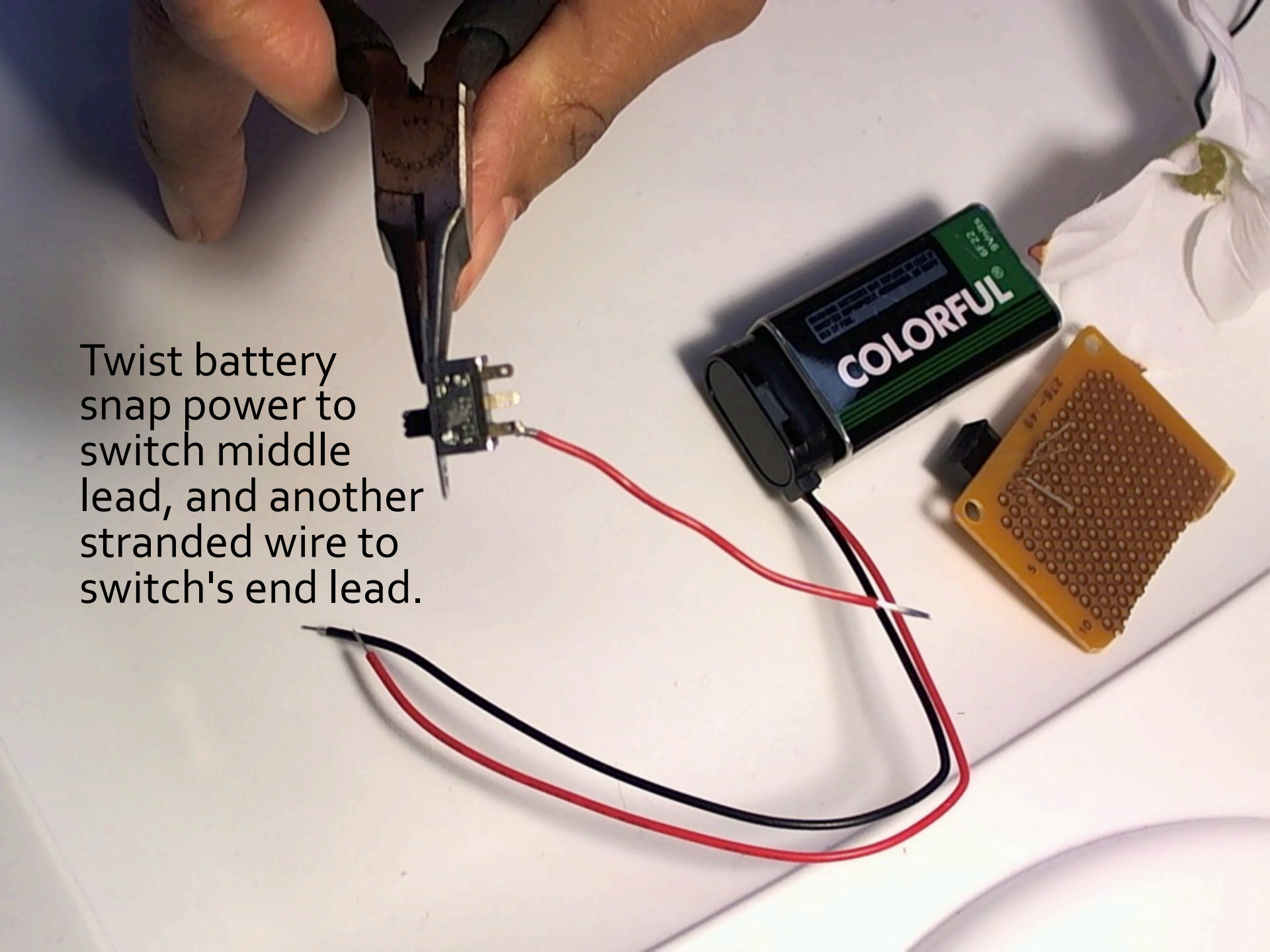

Twist battery snap power to switch middle lead, and another stranded wire to switch's end lead.

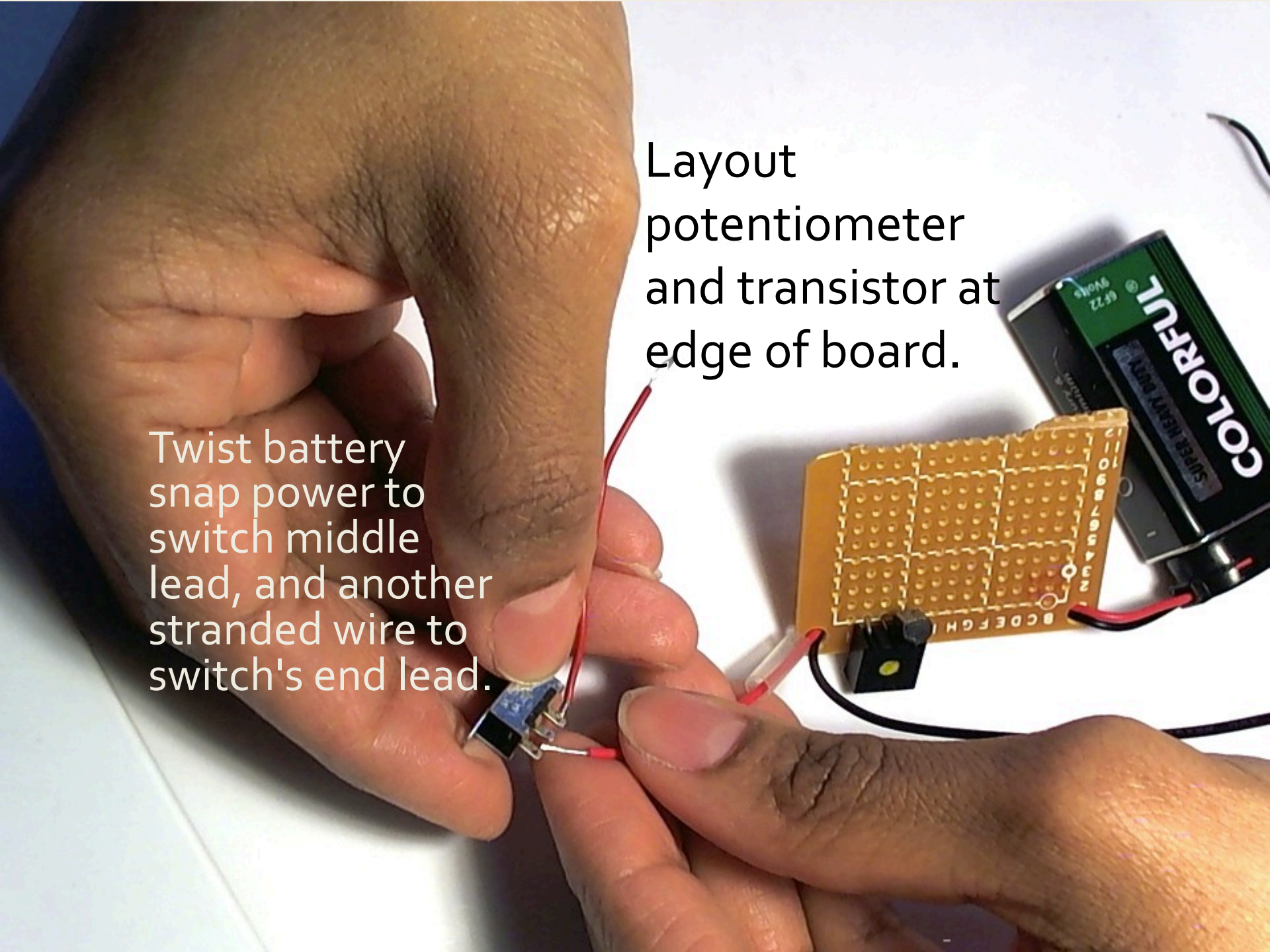
Layout potentiometer and transistor at edge of board.
Twist battery snap power to switch middle lead, and another stranded wire to switch's end lead.
COLORFUL
SUPER HEAVY DUTY
6F22
9Volts

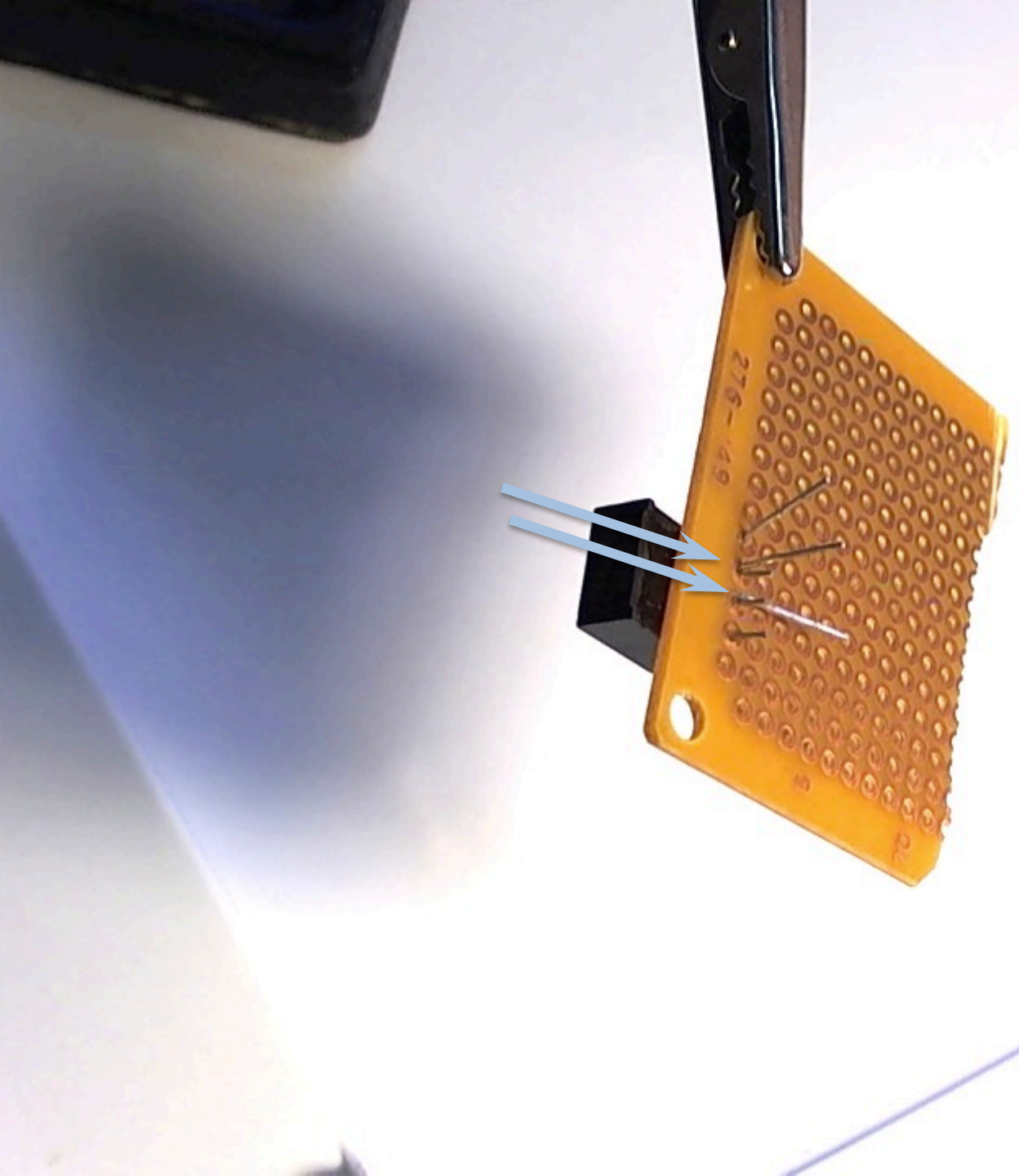

I managed to make the transistor and potentiometer share a couple of holes to save work.

Goal: all wiring along one edge of board (rest = space for battery)

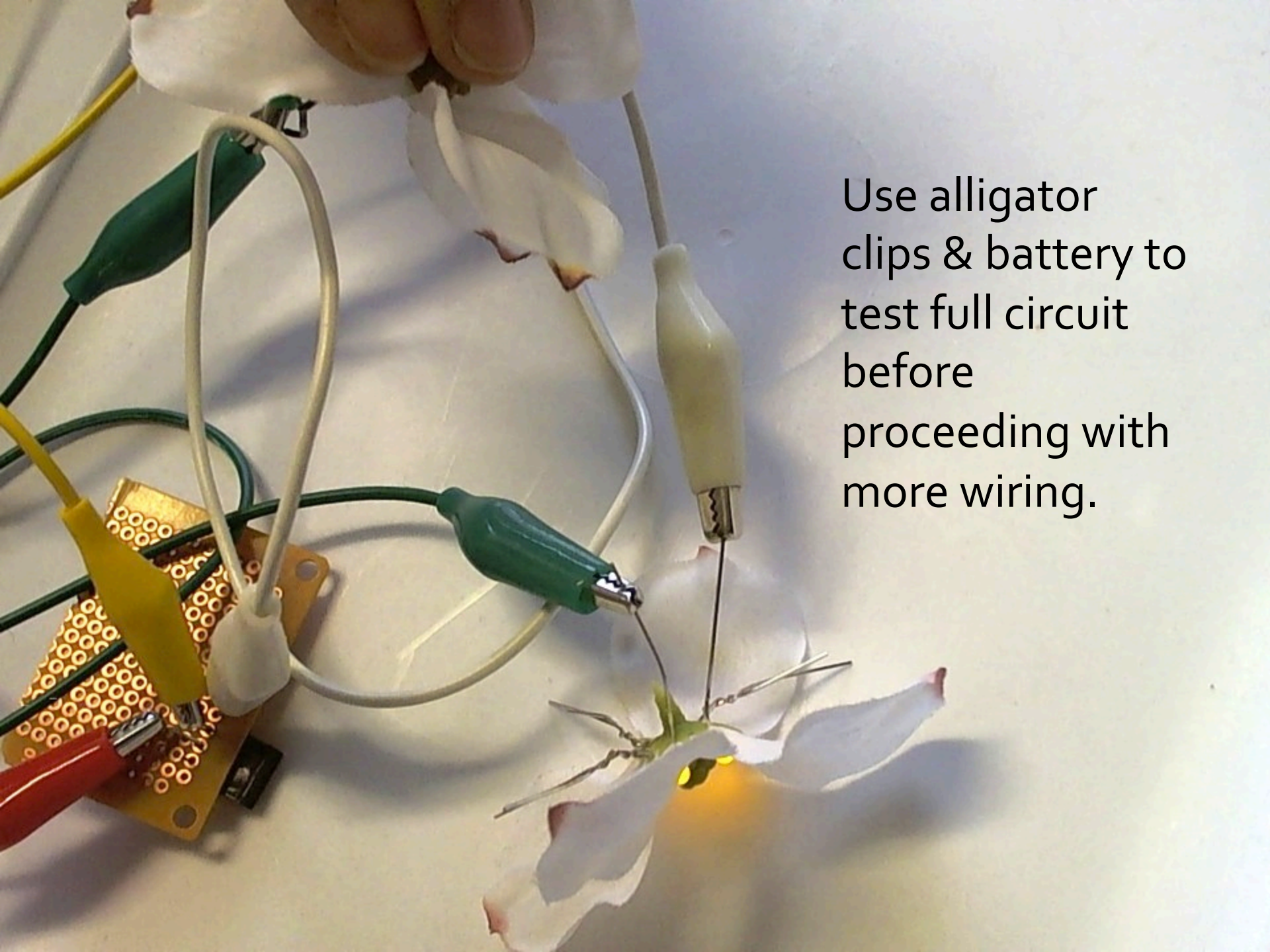

Use alligator clips & battery to test full circuit before proceeding with more wiring.

Wiring flowers

1. Use stranded wire (light) to connect each of the long leads to each other.
2. Use stranded wire (black) to connect each of the short leads to each other.
3. Connect the phototransistor's black wire to one of the LED flowers' short leads.

Wiring flowers

1. Connect another light stranded wire to an LED long lead. This will go to the board.
2. Connect another black stranded wire to a short lead. This will go to the board.

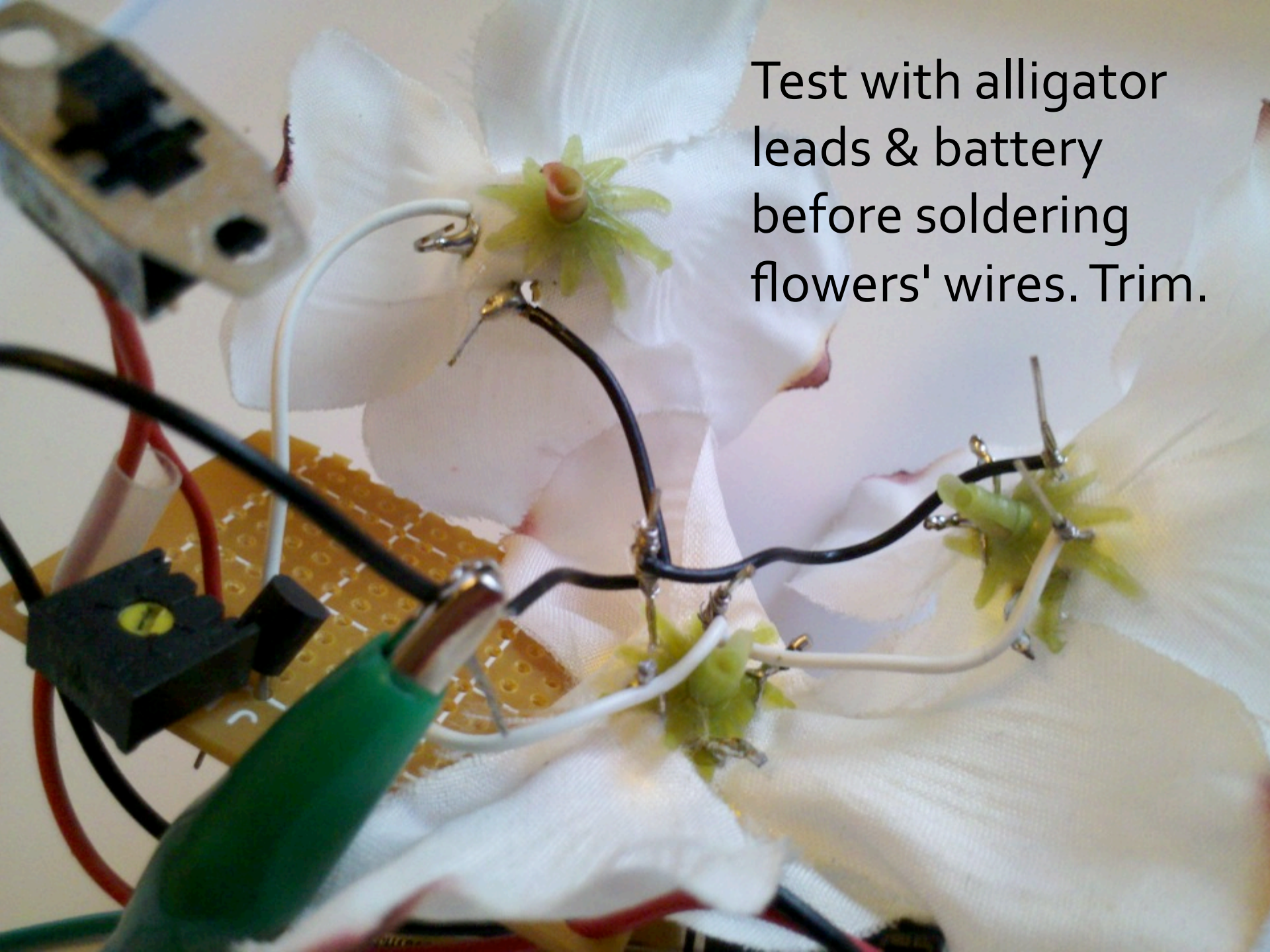
Test with alligator
leads & battery
before soldering
flowers' wires. Trim.

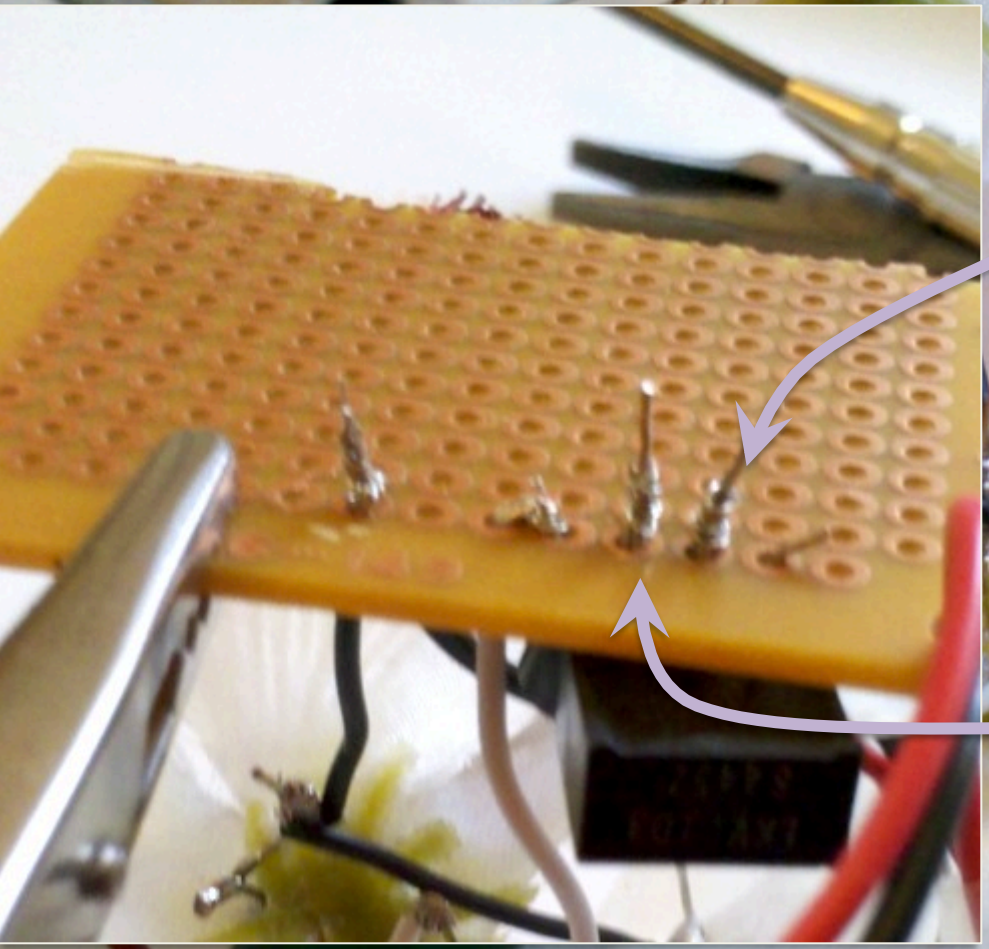

Put the switch's non-battery wire through the board beside the transistor's collector lead. Connect (I twisted) on copper side to stabilize.

Put the phototransistor's collector (not black) wire through the board beside the transistor's center lead. Connect (I twisted) on copper side to stabilize.

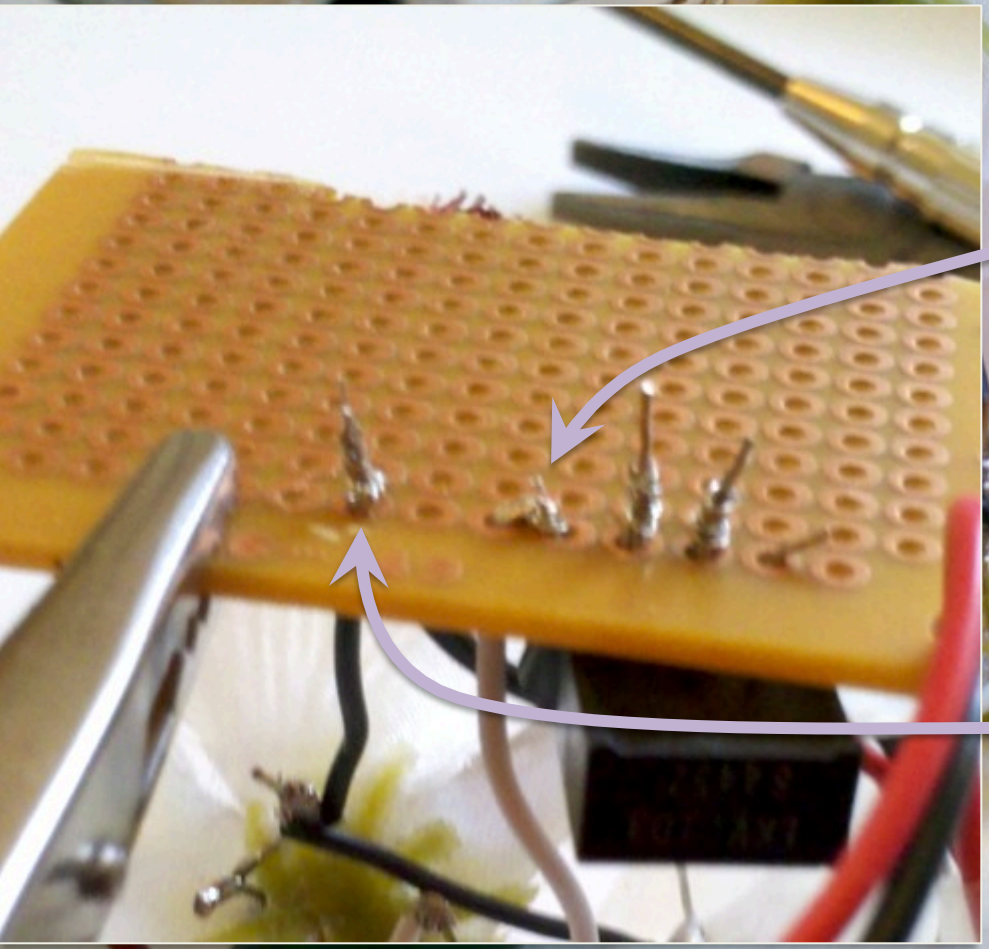

Put the LED long leads' light wire through the board beside the transistor's emitter lead. Connect (I twisted) on copper side to stabilize.

Put the flowers' ground wire through the board near the edge. Put the battery snap's ground wire through the board beside it. Connect (I twisted) on copper side to stabilize.

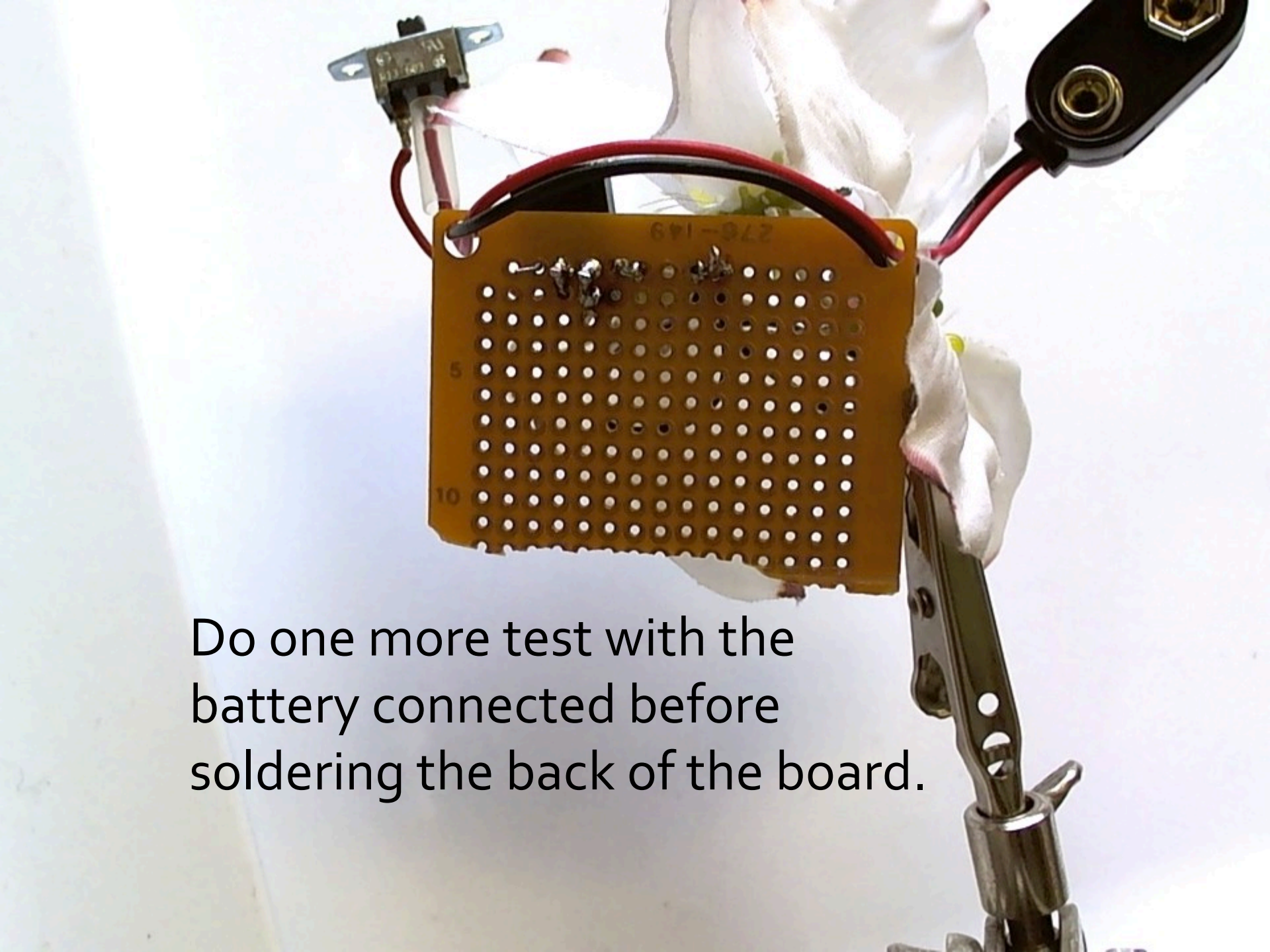

Do one more test with the battery connected before soldering the back of the board.

A couple more flowers to fill in around the edge, and it is starting to look like something...

My finger is covering the phototransistor to cause "dim"

Next:
hot glue
insulation

Next:
hot glue
insulation

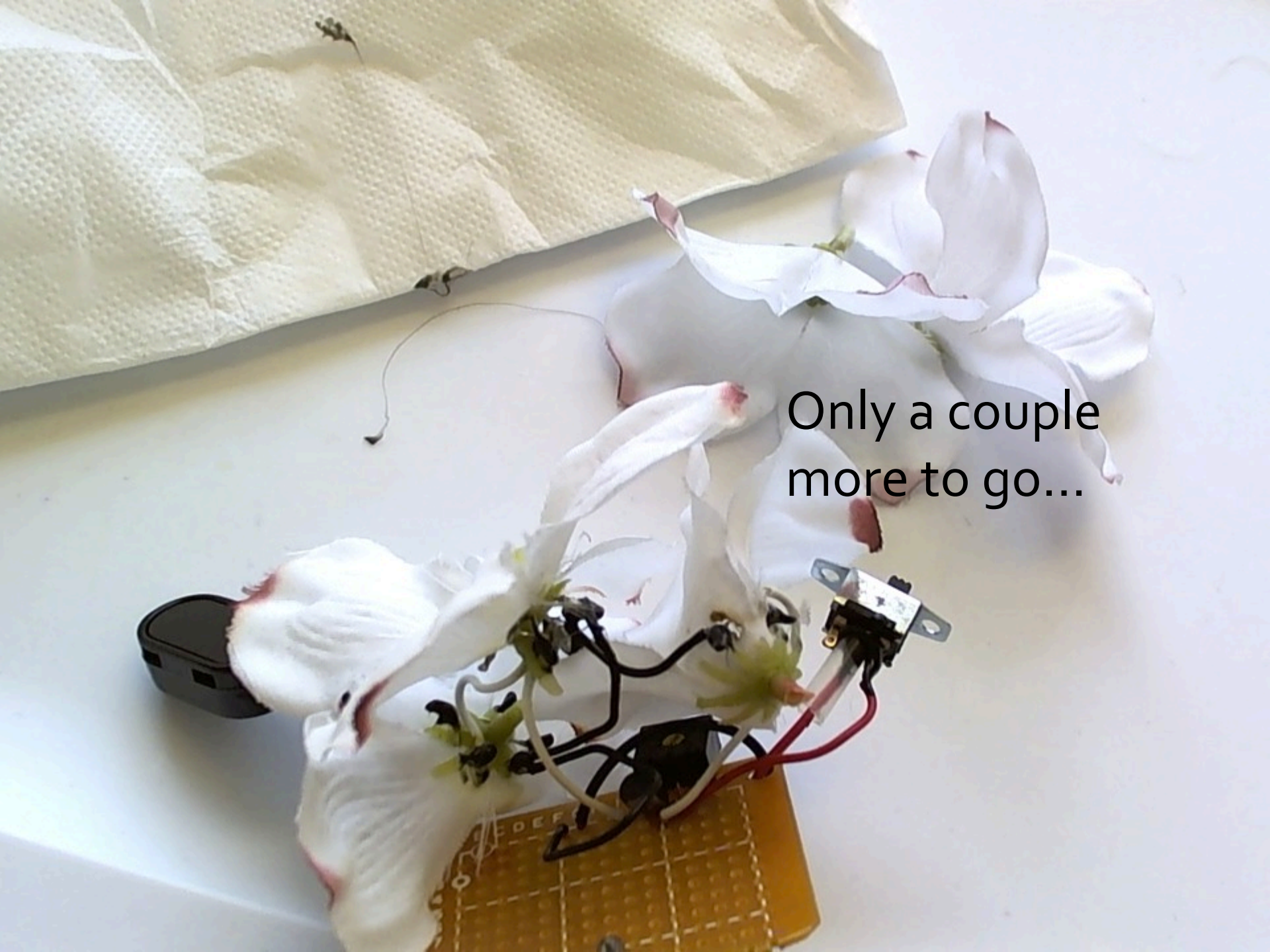
Only a couple
more to go…

Then tape

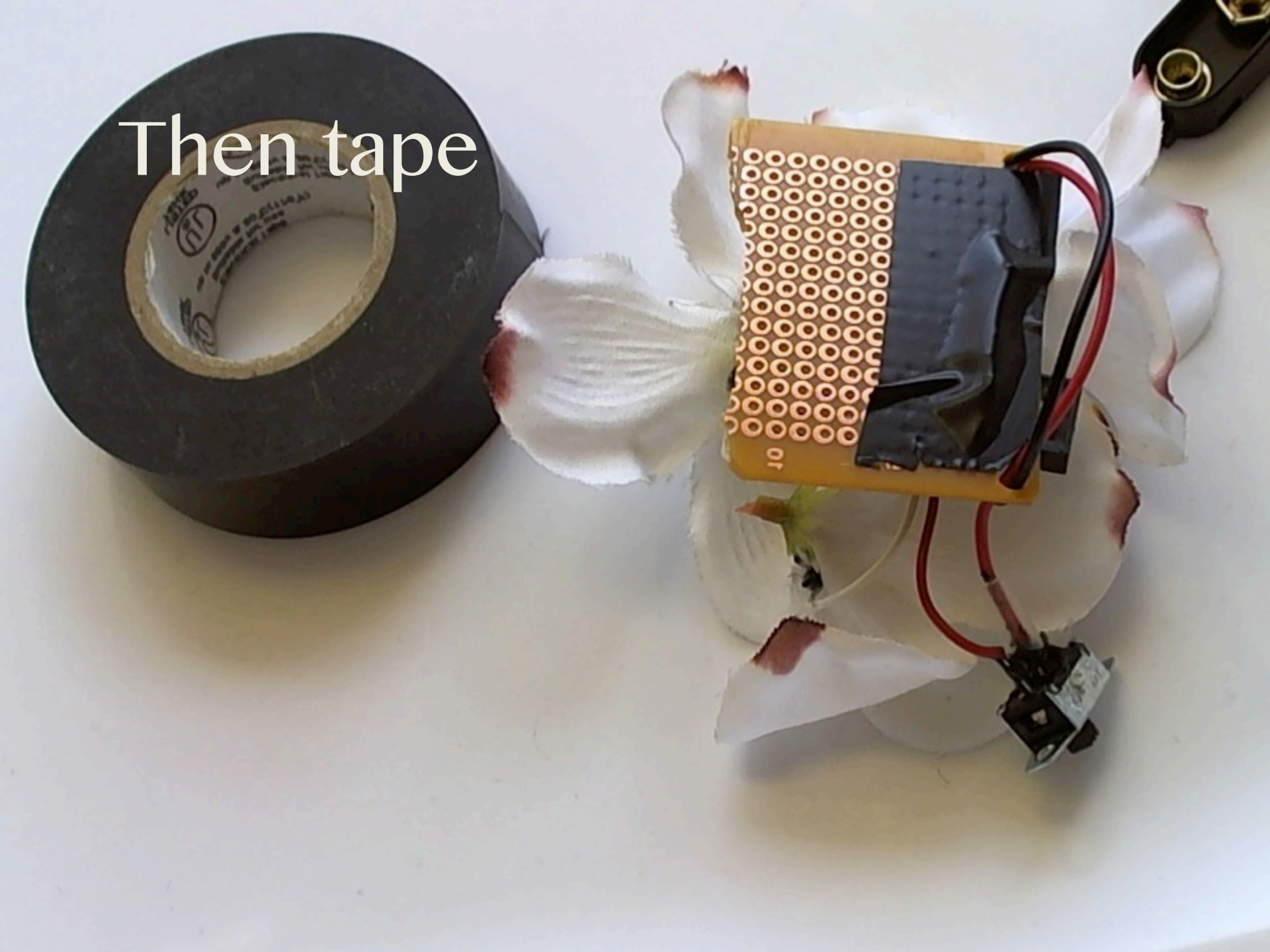

Tape the back and enough of the top to stabilize flowers

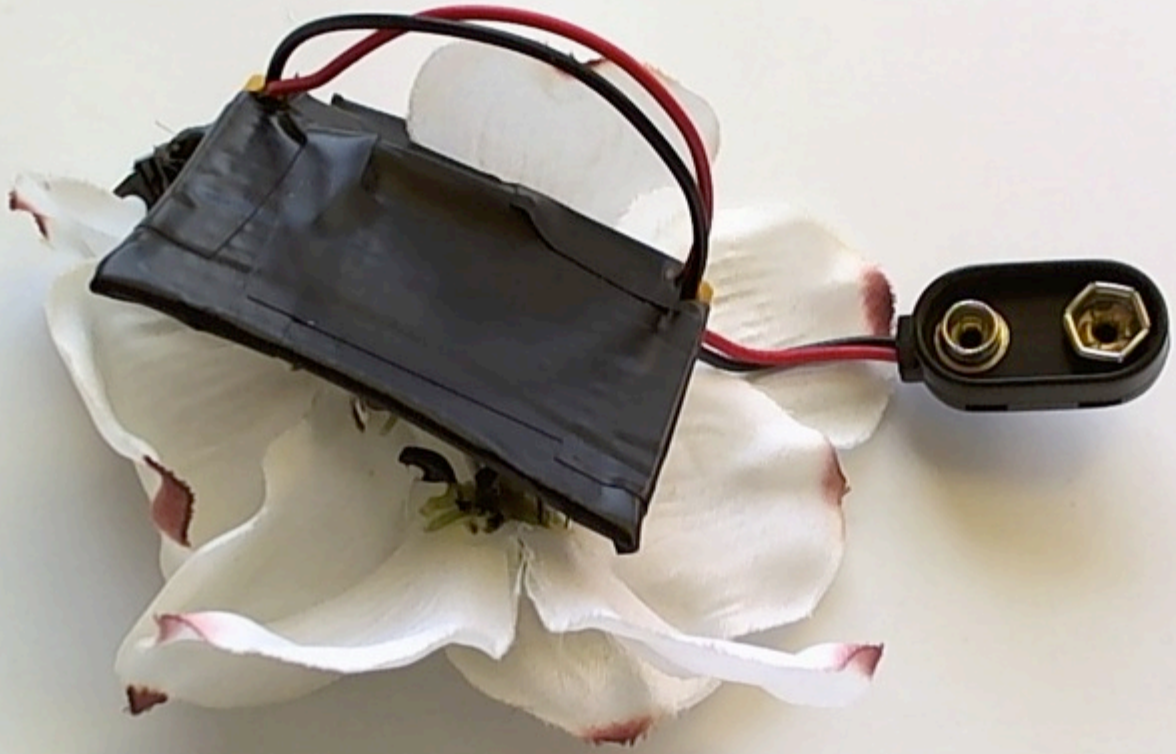

Tape the back and enough of the top to stabilize flowers

You might be finished

A binder clip or two, plus a strip of tape to hold down the battery, might work well enough to secure this to your destination. Party on!

… but I need a bit more :)

Battery pocket & pinning anchor

From some cover-suitable fabric (old shirt), cut out one 3"x8" (or fold and cut 3"x4") rectangle, and one 3"x4", precision not necessary.

Fold the smaller piece, and place it across the larger, centered about 2" from the end.

Fold the smaller piece, and place it across the larger, centered about 2" from the end.

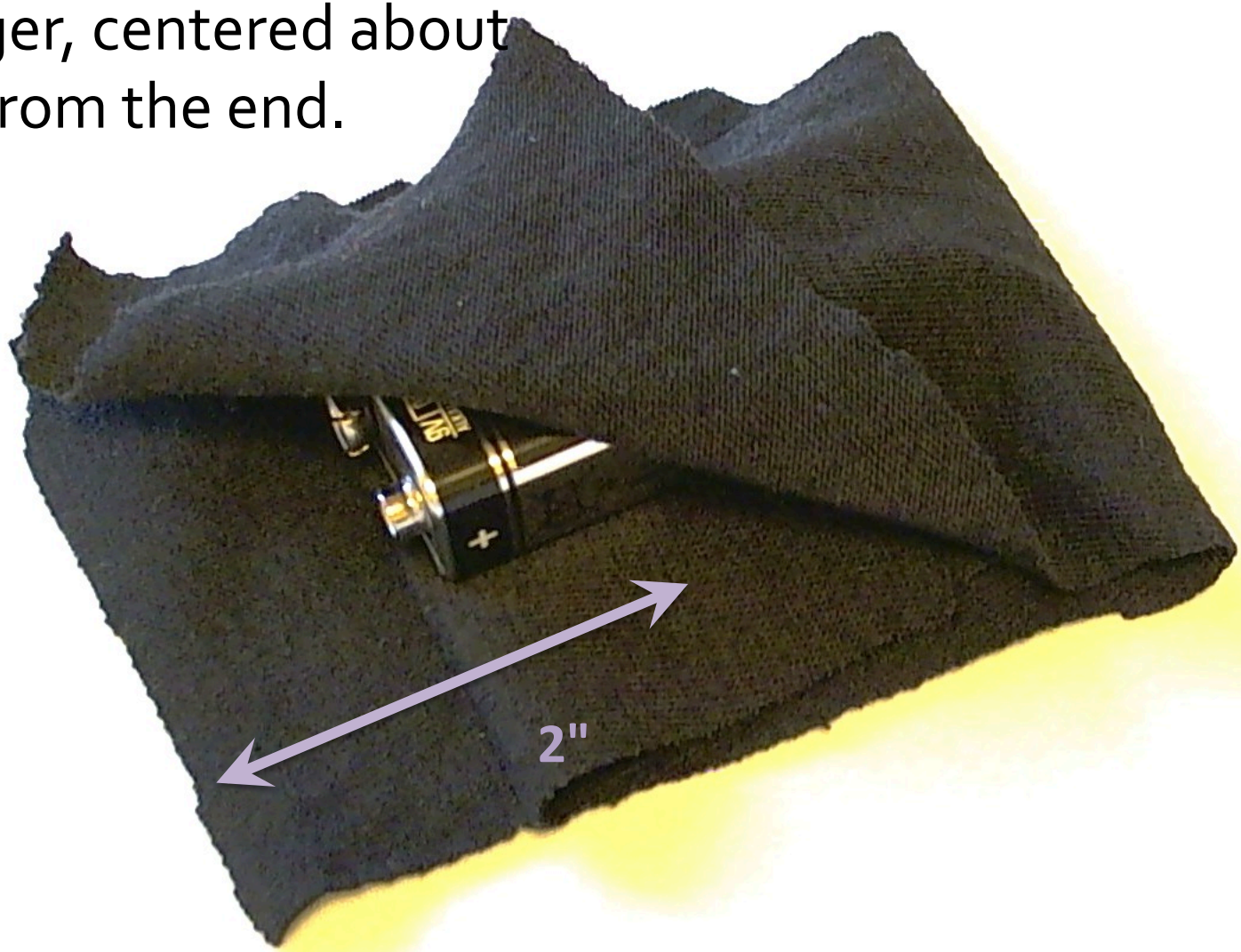

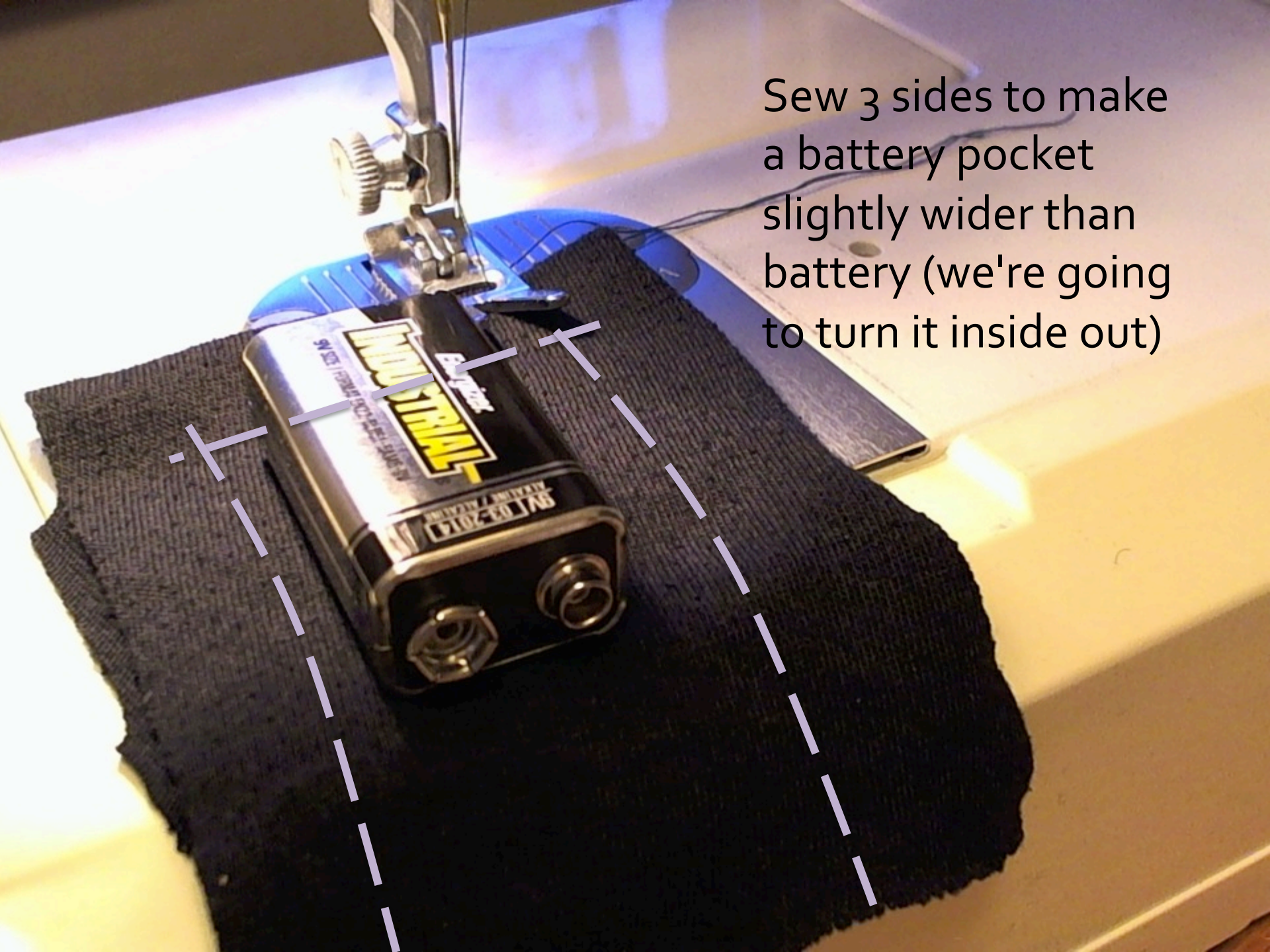

Sew 3 sides to make a battery pocket slightly wider than battery (we're going to turn it inside out)

Trim fabric, leaving about ¼ " overage.
Invert pocket.

We can glue this pocket to the back of board
(padded side out for hat pinning)

If your glue gun gets really hot, stick a pair of slightly-opened scissors (or some other spacer) inside the pocket instead of your fingers at first.

Put the glue on the back of the board, then (using fingers and/or scissors) press the unpadded side of the pocket into the glue. Make sure only 1 fabric layer gets glued.

Glue any extra flowers to bare spots, too.

Pin to the hat band. Wear it somewhere dim.
Fin.